D.K.I. MANUFACTURING

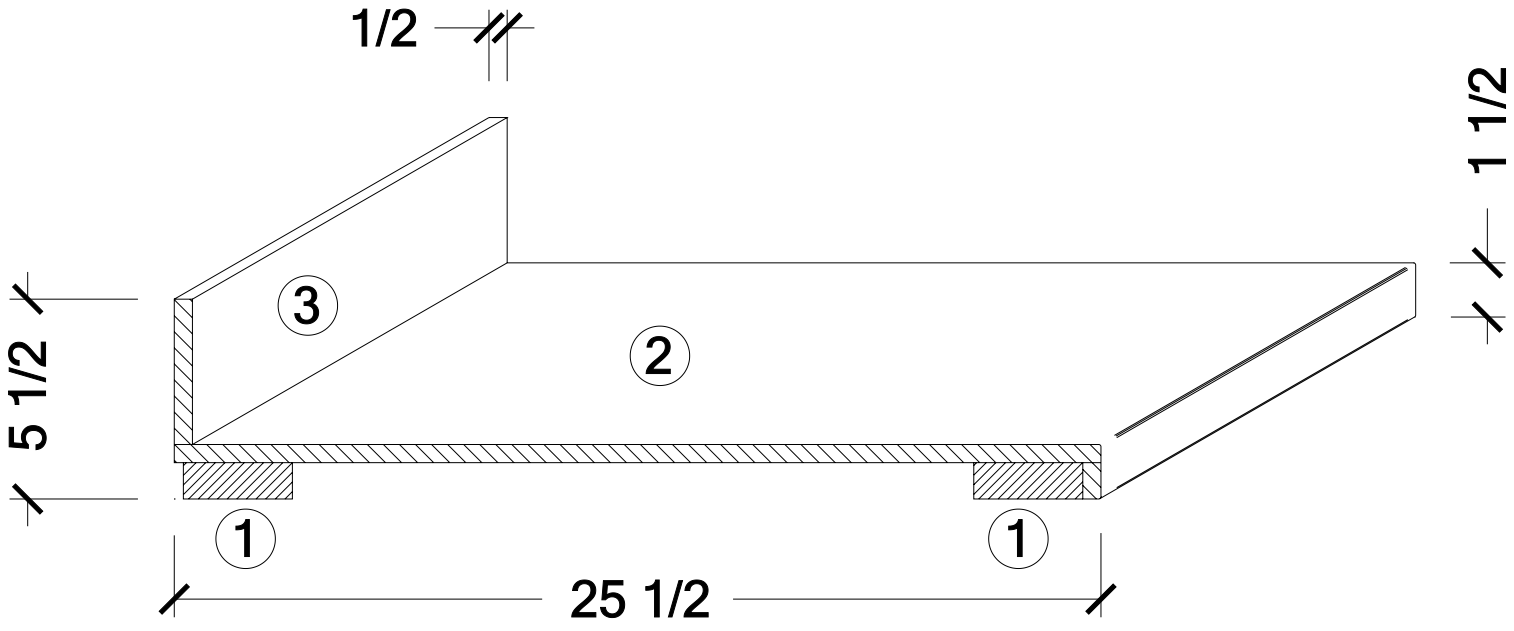

TYPICAL SOLID SUFACE COUNTERTOP CONSTRUCTION

1 BUILD-UP - 3" wide continous particle board glued and stapled

2 CORE - 1/2" thick solid surface

3 SPLASH - 1/2" thick loose solid surface siliconed to deck and wall after countertop installation